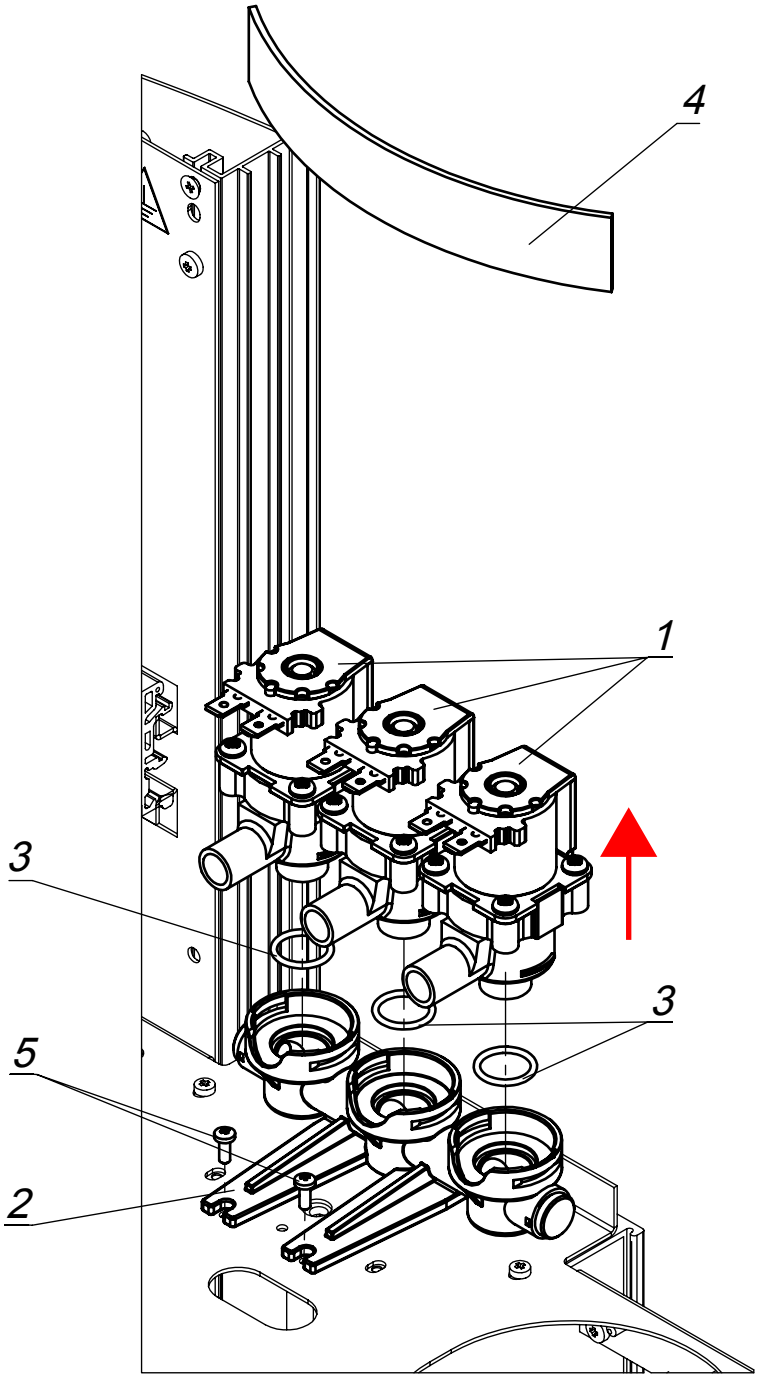

Warning!
Solenoids ITEM NO.1 and fitment holes of the Holder ITEM NO.2 have tight fit.
Set-in the solenoids into holes of the holder must be carried out with high force until bumping.

ITEM NO	PART NUMBER	DESCRIPTION	QTY
1	218.15.105	LP solenoid	3
2	215.33.142	Holder	1
3	215.33.144	Sealing ring	3
4	215.00.045	Clamp	1
5	DIN7981.ST3.5L9.5	Screw St 3.5x9.5 DIN 7981	2

Replacement of the solenoid and separate components.